ИБП Eaton 9PX (1 - 3 кВА) - UPS Eaton 9PX 1-3 kVA и батарейный модуль 9PX EBM 48V и 72V - Инст

Постоянная ссылка на страницу: https://eaton-power.ru/catalog/online/eaton-9px/

ENGLISH

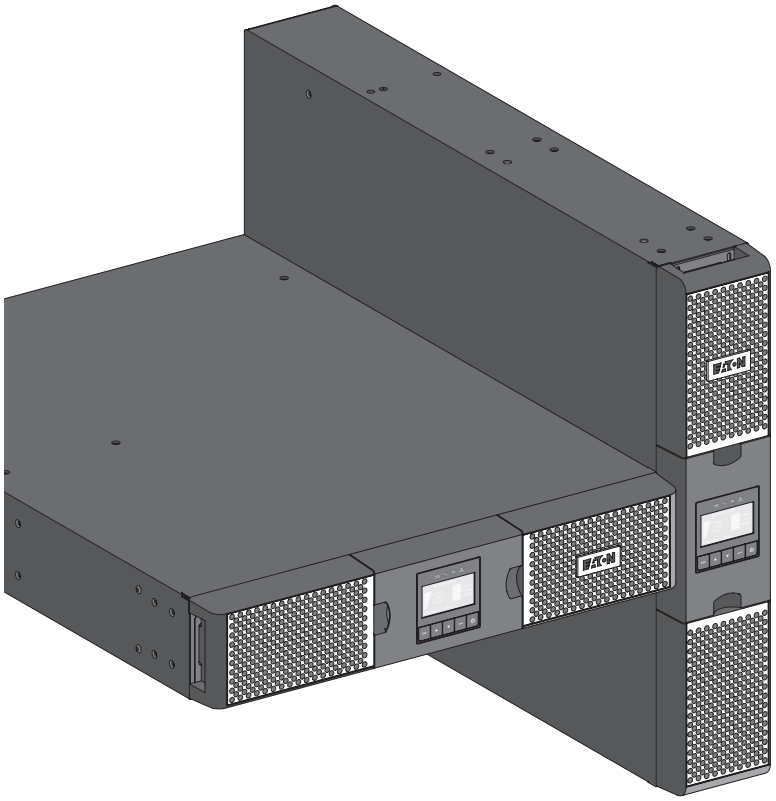

9PX 1000i
9PX 1500i
9PX 2200i
9PX 3000i
9PX EBM 48V
9PX EBM 72V

Installation and user manual

Copyright © 2015 **EATON**
All rights reserved.

ENERGY STAR

SAFETY INSTRUCTIONS

SAVE THESE INSTRUCTIONS. This manual contains important instructions that should be followed during installation and maintenance of the UPS and batteries.

The 9PX models that are covered in this manual are intended for installation in an environment within 0 to 40°C, free of conductive contaminant.

Special symbols

The following are examples of symbols used on the UPS or accessories to alert you to important information:

RISK OF ELECTRIC SHOCK - Observe the warning associated with the risk of electric shock symbol.

Important instructions that must always be followed.

Do not discard the UPS or the UPS batteries in the trash.
This product contains sealed lead acid batteries and must be disposed as it's explain in this manual.
For more information, contact your local recycling/reuse or hazardous waste center.

This symbol indicates that you should not discard waste electrical or electronic equipment (WEEE) in the trash. For proper disposal, contact your local recycling/reuse or hazardous waste center.

Information, advice, help.

Refer to the user manual of UPS accessories.

Safety of persons

- The system has its own power source (the battery). Consequently, the power outlets may be energized even if the systems is disconnected from the AC power source. Dangerous voltage levels are present within the system. It should be opened exclusively by qualified service personnel.
- The system must be properly grounded.
- The battery supplied with the system contains small amounts of toxic materials.
  To avoid accidents, the directives listed below must be observed:
  - Servicing of batteries should be performed or supervised by personnel knowledgeable about batteries and the required precautions.
  - When replacing batteries, replace with the same type and number of batteries or battery packs.
  - Do not dispose of batteries in a fire. The batteries may explode.
  - Batteries constitute a danger (electrical shock, burns). The short-circuit current may be very high.
- Precautions must be taken for all handling:
  - Wear rubber gloves and boots.
  - Do not lay tools or metal parts on top of batteries.
  - Disconnect charging source prior to connecting or disconnecting battery terminals.
  - Determine if battery is inadvertently grounded. If inadvertently grounded, remove source from ground. Contact with any part of a grounded battery can result in electrical shock. The likelihood of such shock can be reduced if such grounds are removed during installation and maintenance (applicable to equipment and remote battery supplies not having a grounded supply circuit).

Product safety

- The UPS connection instructions and operation described in the manual must be followed in the indicated order.
- CAUTION - To reduce the risk of fire, the unit connects only to a circuit provided with 20 or 30 amperes maximum branch circuit overcurrent protection in accordance with the National Electric Code, ANSI/NFPA 70 (US installations only).
- Check that the indications on the rating plate correspond to your AC powered system and to the actual electrical consumption of all the equipment to be connected to the system.
- For PLUGGABLE EQUIPMENT, the socket-outlet shall be installed near the equipment and shall be easily accessible
- Never install the system near liquids or in an excessively damp environment.
- Never let a foreign body penetrate inside the system.
- Never block the ventilation grates of the system.
- Never expose the system to direct sunlight or source of heat.
- If the system must be stored prior to installation, storage must be in a dry place.
- The admissible storage temperature range is -25°C to +55°C without batteries, 0°C to +35°C with batteries.
- The system is not for use in a computer room AS DEFINED IN the standard for the Protection of Information Technology Equipment, ANSI/NFPA 75 (US installations only).

  Contact Eaton resellers to order a special battery kit, if needed to meet the ANSI/NFPA 75 requirement.

SAFETY INSTRUCTIONS

Special precautions

- The unit is heavy: wear safety shoes and use vacuum lifter preferentially for handling operations.
- All handling operations will require at least two people (unpacking, lifting, installation in rack system).
- Before and after the installation, if the UPS remains de-energized for a long period, the UPS must be energized for a period of 24 hours, at least once every 6 months (for a normal storage temperature less than 25°C). This charges the battery, thus avoiding possible irreversible damage.
- During the replacement of the Battery Module, it is imperative to use the same type and number of element as the original Battery Module provided with the UPS to maintain an identical level of performance and safety. If there are any questions, don't hesitate to contact your EATON representative.
- All repairs and service should be performed by AUTHORIZED SERVICE PERSONNEL ONLY. There are NO USER SERVICEABLE PARTS inside the UPS.

Contents

1. Introduction
1.1 Environmental protection 6

2. Presentation
2.1 Standard installations 8
2.2 Rear panels 9
2.3 Accessories 10
2.4 Control panel 11
2.5 LCD description 12
2.6 Display functions 13
2.7 User settings 13

3. Installation
3.1 Inspecting the equipment 17
3.2 Checking the accessory kit 17
3.3 Connecting the EBM(s) 18
3.4 Connecting other accessories 19
3.5 Tower installation 20
3.6 Rack installation 21
3.7 UPS connection without HotSwap MBP module 22
3.8 Connection with a HotSwap MBP module (optional, standard on HotSwap versions) 23

4. Communication
4.1 Communication ports 24
4.2 UPS remote control functions 25
4.3 Eaton Intelligent Power Software suite 27

5. Operation
5.1 Start-up and Normal operation 28
5.2 Starting the UPS on Battery 28
5.3 UPS Shutdown 28
5.4 Operating modes 28
5.5 Return of AC Input Power 29
5.6 Setting High Efficiency mode 29
5.7 Configuring Bypass settings 29
5.8 Configuring battery settings 30
5.9 Retrieving the Event log 30
5.10 Retrieving the Fault log 30

6. UPS maintenance
6.1 Equipment care 31
6.2 Storing the equipment 31
6.3 When to replace batteries 31
6.4 Replacing batteries 32
6.5 Replacing the UPS equipped with a HotSwap MBP 34
6.6 Recycling the used equipment 34

7. Troubleshooting
7.1 Typical alarms and faults 35
7.2 Silencing the alarm 36
7.3 Service and support 36
7.4 CE compliance contact 36

8. Specifications
8.1 Model specifications 37

9. Glossary 40

1. Introduction

Thank you for selecting an EATON product to protect your electrical equipment.

The 9PX range has been designed with the utmost care.
We recommend that you take the time to read this manual to take full advantage of the many features of your UPS (Uninterruptible Power System).

Before installing your 9PX, please read the booklet presenting the safety instructions.
Then follow the indications in this manual.

To discover the entire range of EATON products and the options available for the 9PX range, we invite you to visit our web site at www.eaton.com/powerquality or contact your EATON representative.

1.1 Environmental protection

EATON has implemented an environmental-protection policy.
Products are developed according to an eco-design approach.

Substances

This product does not contain CFCs, HCFCs or asbestos.

Packing

To improve waste treatment and facilitate recycling, separate the various packing components.

- The cardboard we use comprises over 50% of recycled cardboard.
- Sacks and bags are made of polyethylene.
- Packing materials are recyclable and bear the appropriate identification symbol

Materials	Abbreviations	Number in the symbols
Polyethylene terephthalat	PET	01
High-density polyethylene	HDPE	02
Polyvinyl chloride	PVC	03
Low-density polyethylene	LDPE	04
Polypropylene	PP	05
Polystyrene	PS	06

Follow all local regulations for the disposal of packing materials.

End of life

EATON will process products at the end of their service life in compliance with local regulations.
EATON works with companies in charge of collecting and eliminating our products at the end of their service life.

Product

The product is made up of recyclable materials.
Dismantling and destruction must take place in compliance with all local regulations concerning waste.
At the end of its service life, the product must be transported to a processing center for electrical and electronic waste.

Battery

The product contains lead-acid batteries that must be processed according to applicable local regulations concerning batteries.
The battery may be removed to comply with regulations and in view of correct disposal.

1. Introduction

The Eaton® 9PX uninterruptible power system (UPS) protects your sensitive electronic equipment from the most common power problems, including power failures, power sags, power surges, brownouts, line noise, high voltage spikes, frequency variations, switching transients, and harmonic distortion.

Power outages can occur when you least expect it and power quality can be erratic. These power problems have the potential to corrupt critical data, destroy unsaved work sessions, and damage hardware - causing hours of lost productivity and expensive repairs.

With the Eaton 9PX, you can safely eliminate the effects of power disturbances and guard the integrity of your equipment. Providing outstanding performance and reliability, the Eaton 9PX's unique benefits include:

- True online double-conversion technology with high power density, utility frequency independence, and generator compatibility.
- ABM® technology that uses advanced battery management to increase battery service life, optimize recharge time, and provide a warning before the end of useful battery life.
- Selectable High Efficiency mode of operation.
- Standard communication options: one RS-232 communication port, one USB communication port, and relay output contacts.
- Optional connectivity cards with enhanced communication capabilities.
- Extended runtime with up to four Extended Battery Modules (EBMs) per UPS.
- Remote On/Off control through Remote On/Off (ROO) and Remote Power Off (RPO) ports.
- Backed by worldwide agency approvals.

2. Presentation

2.1 Standard installations

Tower installation

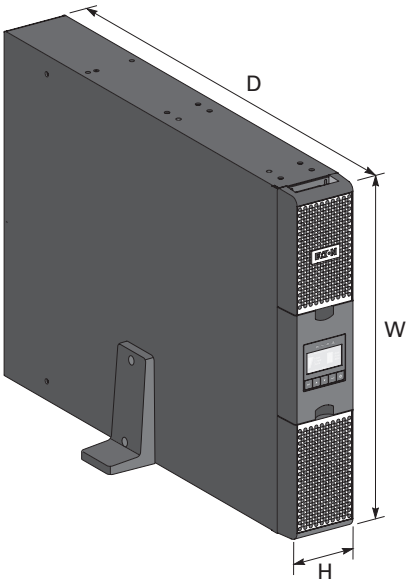

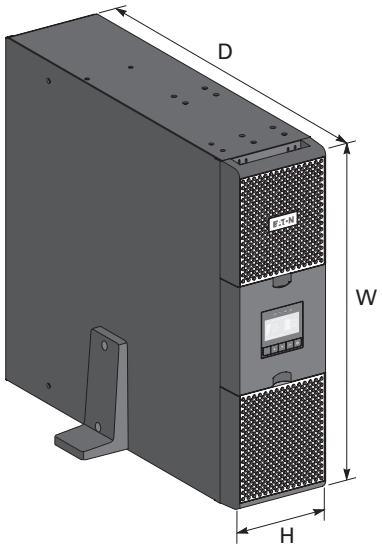

Rack installation

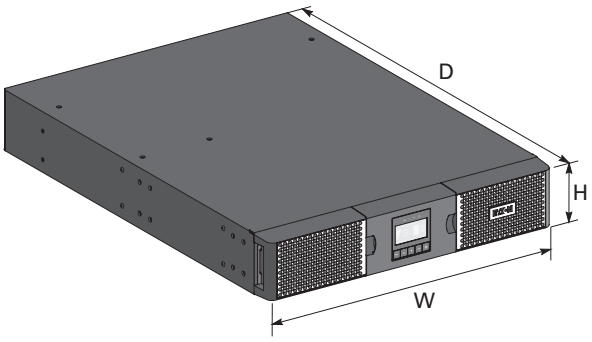

Description	Weights (kg/lb)	Dimensions (mm/inch) D x W x H
9PX1000IRT2U	-	-
9PX1500IRT2U	-	-
9PX1500IRTM	-	-
9PX2200IRT2U	**25** / 55.2	**605 x 440 x 86.5** / 23.8 x 17.3 x 3.4
9PX2200IRT3U	**24.5** / 54.1	**485 x 440 x 130** / 19.1 x 17.3 x 5.1
9PX3000IRT2U	**27.6** / 60.8	**605 x 440 x 86.5** / 23.8 x 17.3 x 3.4
9PX3000IRT3U	**27.4** / 60.4	**485 x 440 x 130** / 19.1 x 17.3 x 5.1
9PX3000IRTM	-	-
9PXEBM48RT2U	-	-
9PXEBM72RT2U	**39.2** / 86.4	**605 x 440 x 86.5** / 23.8 x 17.3 x 3.4
9PXEBM72RT3U	**38.2** / 84.2	**485 x 440 x 130** / 19.1 x 17.3 x 5.1

2.2 Rear panels

9PX 1000IRT & 9PX 1500IRT

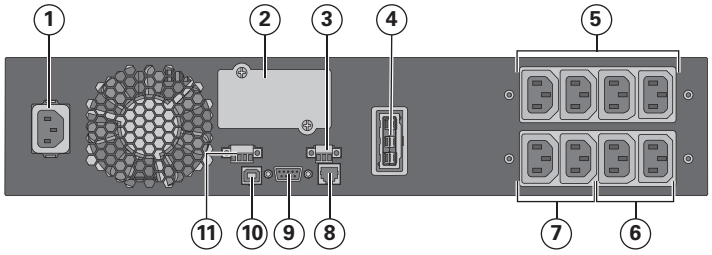

9PX 2200IRT & 9PX 3000IRT (2U)

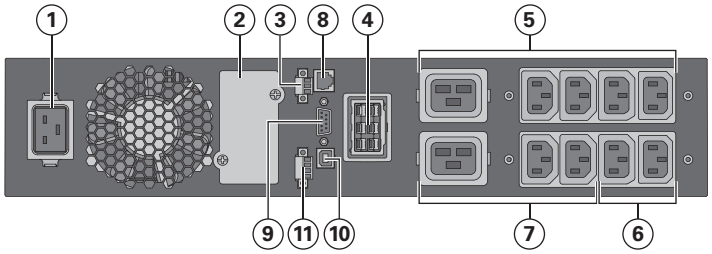

9PX 2200IRT & 9PX 3000IRT (3U)

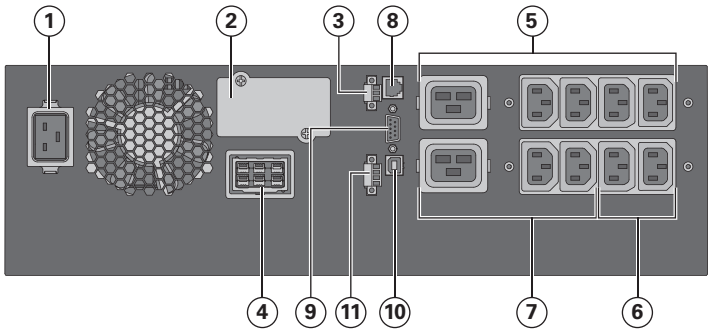

① Socket for connection to AC power source
② Slot for optional communication card
③ Relay output contact
④ Connector for additional battery module
⑤ Primary group: outlets for connection of critical equipment
⑥ Group 2: programmable outlets for connection of equipment
⑦ Group 1: programmable outlets for connection of equipment
⑧ Connector for automatic recognition of an additional battery module
⑨ RS232 communication port
⑩ USB communication port
⑪ Connector for ROO (Remote On/Off) control and RPO (Remote Power Off)

9PX EBM 48V

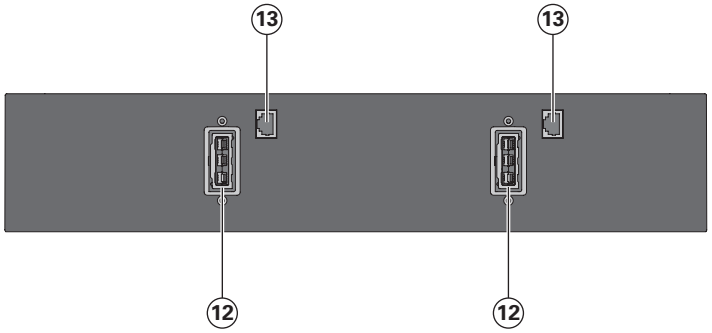

⑫ Connectors for battery modules (to the UPS or to the other battery modules)
⑬ Connectors for automatic recognition of battery modules

9PX EBM 72V (2U)

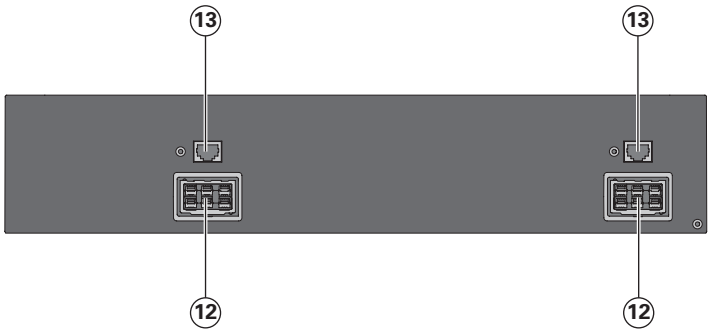

2. Presentation

9PX EBM 72V (3U)

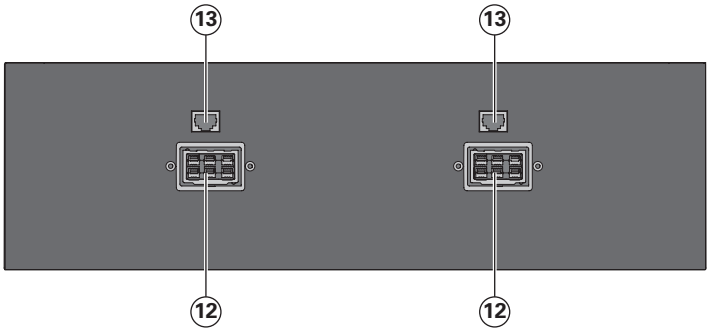

⑫ Connectors for battery modules (to the UPS or to the other battery modules)
⑬ Connectors for automatic recognition of battery modules

2.3 Accessories

Part number	Description
9PXEBM48RT2U 9PXEBM72RT2U 9PXEBM72RT3U	Extended battery module
Network-MS	Network card
Modbus-MS	Modbus and network card
Relay-MS	Relay card
BINTSYS	Battery Integration System
EBMCBL48 EBMCBL72	1.8m cable 48V EBM 1.8m cable 72V EBM
MBP3KI MBP3KIF MBP3KID MBP3KIH MBP3KIB	Maintenance Bypass

2.4 Control panel

The UPS has a five-button graphical LCD. It provides useful information about the UPS itself, load status, events, measurements and settings.

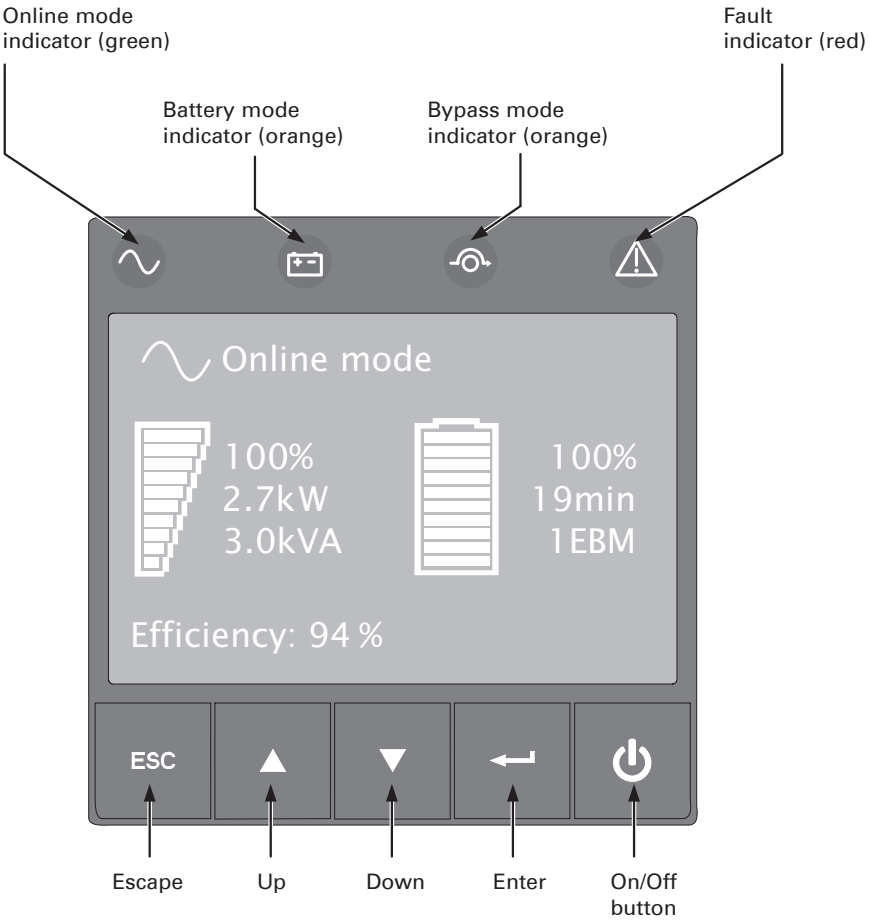

The following table shows the indicator status and description:

Indicator	Status	Description
Green	On	The UPS is operating normally on Online or on High Efficiency mode.
Orange	On	The UPS is on Battery mode.
Orange	On	The UPS is on Bypass mode.
Red	On	The UPS has an active alarm or fault. See trouble-shooting on page 35 for additional information.

2. Presentation

2.5 LCD description

After 5 minutes of inactivity, the LCD displays the screen saver.

The LCD backlight automatically dims after 10 minutes of inactivity. Press any button to restore the screen.

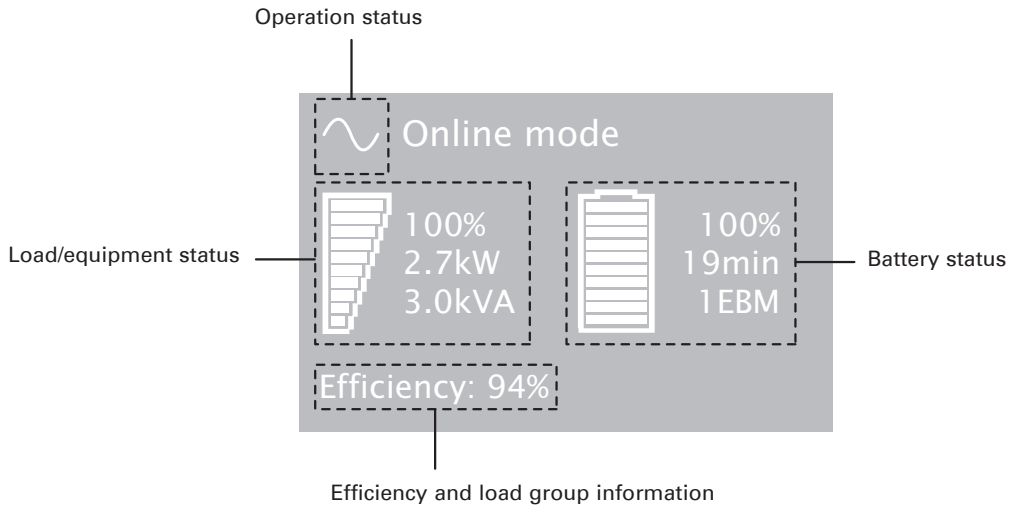

The following table describes the status information provided by the UPS

Note: If other indicator appears, see troubleshooting on page 35 for additional information.

Operation status	Cause	Description
Standby mode	The UPS is Off, waiting form start-up command from user.	Equipment is not powered until ⏻ button is pressed.
Online mode	The UPS is operating normally.	The UPS is powering and protecting the equipment.
Battery mode 1 beep every 10 seconds	A utility failure has occured and the UPS is on Battery mode.	The UPS is powering the equipment with the battery power. Prepare your equipment for shut-down.
End of backup time 1 beep every 3 seconds	The UPS is on Battery mode and the battery is running low.	This warning is approximate, and the actual time to shutdown may vary significantly.
High Efficiency mode	The UPS is operating on High Efficiency mode.	The UPS is powering and protecting the equipment.
Bypass mode	An overload or a fault has occurred, or a command has been received, and the UPS is on Bypass mode.	Equipment is powered but not protected by the UPS.

2.6 Display functions

Press the Enter (↵) button to activate the menu options. Use the two middle buttons (▲ and ▼) to scroll through the menu structure. Press the Enter (↵) button to select an option. Press the ESC button to cancel or return to the previous menu.

Main menu	Submenu	Display information or Menu function
Measurements		[Load] W VA A pf / [Input/Output] V Hz / [Efficiency] % / [Battery] % min V n° [Battery remaining life] months / [Average power usage] Wh / [Cumulated power] Wh
Control	Go to Bypass	Transfers the UPS on Bypass mode
	Load segments On/Off	Commands the load segments
	Start battery test	Starts a manual battery test
	Connectivity test	Tests dry contact relay outputs and relay card contacts. Simulates line failure and battery low
	Function reset	Clears active fault, power usage, battery remaining life, reset NMC, Restore factory settings.
Settings	Local settings	Sets product general parameters
	In/Out settings	Sets Input and Output parameters
	On/Off settings	Sets On/Off conditions
	Battery settings	Sets battery configuration
	Com settings	Sets communication parameters
Event log	Event filter	Selects faults, alarms and/or events to display
	Event list	Displays the events stored
	Reset event list	Clears events
Fault log	Fault list	Displays the faults stored
	Reset fault list	Clears faults
Identification		[Product type/model] / [Part/Serial number] / [UPS/NMC firmware] / [Com card IPv4], [Com card IPv6], [Com card MAC]
Registration		Links to Eaton registration website

2.7 User settings

The following table displays the options that can be changed by the user.

	Submenu	Available settings	Default settings
Local settings	Language	[English] [Français] [Deutsch] [Español] [Русский] [Português] [Italiano] [Simplified Chinese] [Japanese] Menus, status, notices and alarms, UPS fault, Event Log data and settings are in all supported languages.	[English] User selectable when UPS is powered for the first time.
	Date/ time	Format: [International] [US]	[International]
	LCD	Modify LCD screen brightness and contrast to be adapted to room light conditions.	
	Audible alarm	[Enabled] [Disabled on battery] [Always disabled] Enable or disable the buzzer if an alarm occurs.	[Enabled]
	Protected access	[Enabled] [Disabled] Password is: 0577	[Disabled]

2. Presentation

	Submenu	Available settings	Default settings
In/Out settings	Output voltage	[200V] [208V] [220V] [230V] [240V]	[230V]
	Output frequency	Mode: [Normal] [Converter] [Marine] Frequency can be changed in Frequency [Converter] mode In [Marine] mode output frequency follows input frequency	[Normal]
	Output mode	Mode: [Industrial] [IT] [Custom] Overload: [Inv>Stop] [Inv>BP] [Inv>BP>Inv] Short-circuit: [Inv>Stop] [Inv>BP] [Inv>BP>Inv]	[IT] [Inv>BP>Inv] [Inv>Stop]
	Input volt hysteresis	Sets input voltage hysteresis from [1] to |10V]	[10V]
	High Efficiency mode	[Enabled] [Disabled] Power the output from Bypass for high efficiency	[Disabled]
	Bypass settings	[Volt low] [Volt high] [Qualify] [Hz synch] [Unsynch]	[160V]; [276V]; [In spec]; [5%]; [Half cycle]
	Load segments	[Auto start delay] [Auto shutdown delay]	UPS: [0s]; Group1: [3s]; Group2: [6s] UPS: [Disabled]; Group1: [Disabled]; Group2: [Disabled]
	Overload prealarm	[10%] ... [102%] Load % when overload alarm occurs	[102%]
On/Off settings	Start/Restart	[Cold start] [Auto restart] [Auto start] [Start on bypass]	[Cold start] [Auto restart] are Enabled [Auto start] [Start on bypass] are Disabled
	Forced reboot	[Enabled] [Disabled] [Timer] [10s] ... [180s] When mains recover during a shutdown sequence: If set to Enabled, shutdown sequence will complete and wait 10 seconds prior to restart, If set to Disabled, shutdown sequence will not complete, UPS stays on.	[Enabled] [10s]
	Energy saving	[Enabled] [Disabled] [Time] [1min] ... [15min] [Level] [100W] ... [1000W] If Enabled, UPS will shut-down after defined duration. of back-up time, if load is less than set value.	[Disabled] [5min] [100W]
	Sleep mode	[Enabled] [Disabled] [Timer] [10min] ... [120min] If Disabled, LCD and communication will turn OFF immediately after UPS is OFF. If Enabled, LCD and communication stays ON 1h30 min after UPS is OFF.	[Enabled] [90min]
	Site wiring fault	[Enabled] [Disabled] Prevents from starting the UPS in case of phase vs neutral wires swapping.	[Disabled]
	Power Off alert	[Enabled] [Disabled] If Enabled, activates a confirmation screen that requires user confirmation after pressing the power button, before the UPS shutdown occurs.	[Enabled]

	Submenu	Available settings	Default settings
Battery settings	Automatic battery test	In ABM cycling mode : [No test] [Every ABM cycle] In constant charge mode: [No test] [Every day] [Every week] [Every month]	[Every ABM cycle] [Every week]
	Low battery warning	[Capacity] [0%] ... [100%] [Runtime] [0min] ... [60min] The alarm triggers when the set percentage of battery capacity or remaining back-up time is reached.	[0%] [3min]
	Restart bat. level	[0%] ... [100%] If set, automatic restart will occur only when percentage of battery charge is reached.	[0%]
	Battery charge mode	[ABM cycling] [Constant charge]	[ABM cycling]
	External battery	[Auto detection] [Manual EBM set.] [Manual battery set.]	[Auto detection] Using standard EBM, UPS detects automatically the number of EBM connected
	Deep Disch. protect.	[Yes] [No] If set to Yes, the UPS automatically prevents battery from deep discharge by adapting end of back-up time voltage threshold. Warranty void if set to No.	[Yes]
Com settings	**Input signals**	[ROO] [RPO] [DB9-4] Sets Input signals parameters (function, delay, operation) through external contact connectors or RS232 port. **ROO port:** - [Function]: [No] [ROO] [RPO] [Building alarm] [Forced bypass] [On generator] [Remote shutdown] - [Delay]: [0s] ... [999s] - [Active]: [Open] [Closed] **RPO port:** - [Function]: [No] [ROO] [RPO] [Building alarm] [Forced bypass] [On generator] [Remote shutdown] - [Delay]: [0s] ... [999s] - [Active]: [Open] [Closed] **DB9-4 port:** - [Function]: [No] [ROO] [RPO] [Building alarm] [Forced bypass] [On generator] [Remote shutdown] - [Delay]: [0s] ... [999s] - [Active]: [High] [Low]:	 [No] [0s] [Closed] [No] [0s] [Open] [No] [0s] [High]

2. Presentation

	Submenu	Available settings	Default settings
Com settings	**Output signals**	[Relay] [DB9-1] [DB9-7] [DB9-8] Sets events or fault that will actuate Output signal parameters through external contact connector or RS232 port [Relay]: [On bat] [Low bat] [Bat fault] [Bypass] [UPS OK] [Load protected] [Load powered] [General alarm] [Ext. charger ON] [OVL pre-alarm] [DB9-1]: [On bat] [Low bat] [Bat fault] [Bypass] [UPS OK] [Load protected] [Load powered] [General alarm] [Ext. charger ON] [OVL pre-alarm] [DB9-7]: [On bat] [Low bat] [Bat fault] [Bypass] [UPS OK] [Load protected] [Load powered] [General alarm] [Ext. charger ON] [OVL pre-alarm] [DB9-8]: [On bat] [Low bat] [Bat fault] [Bypass] [UPS OK] [Load protected] [Load powered] [General alarm] [Ext. charger ON] [OVL pre-alarm]	 [Relay] [Bypass] [DB9-1] [Low bat] [DB9-7] [UPS OK] [DB9-8] [On bat]
	Remote command	[Enabled] [Disabled] If Enabled, shutdown or restart commands from software are authorized.	[Enabled]
	Shutdown commands	[Send CMD] [Output OFF] [OFF delay] [restart] Sets events or fault that will actuate Output signal parameters through external contact connector or RS232 port [Send CMD]: [Yes] [No] [Output OFF]: [No] [UPS] [Group 1] [Group 2] [Group 1 + Group 2] [OFF delay]: [0s] …[999s] [Restart]: [Yes] [No]	 Send CMD: [No] Output OFF: [No] OFF delay: [0s] Restart: [Yes]
	On battery notice delay	[0s] ... [99s] Sets delay before noticing on battery information to software.	[0s]
	General alarm	[On battery] [Battery fault] [Overload pre-alarm] [Internal fault] [Ambient temp.] [Fan lock] [Bypass overload] [Current limit] [Short circuit] [Inverter overload] [Power overload] [Low battery] [On bypass] [UPS OK] [Load protected] [Load powered] [Ext. charger ON] Defines which event or fault generate a general alarm through Output signal screen.	[Internal fault]

3.1 Inspecting the equipment

If any equipment has been damaged during shipment, keep the shipping cartons and packing materials for the carrier or place of purchase and file a claim for shipping damage. If you discover damage after acceptance, file a claim for concealed damage.

To file a claim for shipping damage or concealed damage:

1. File with the carrier within 15 days of receipt of the equipment;

2. Send a copy of the damage claim within 15 days to your service representative.

Check the battery recharge date on the shipping carton label. If the date has passed and the batteries were never recharged, do not use the UPS. Contact your service representative.

3.2 Checking the accessory kit

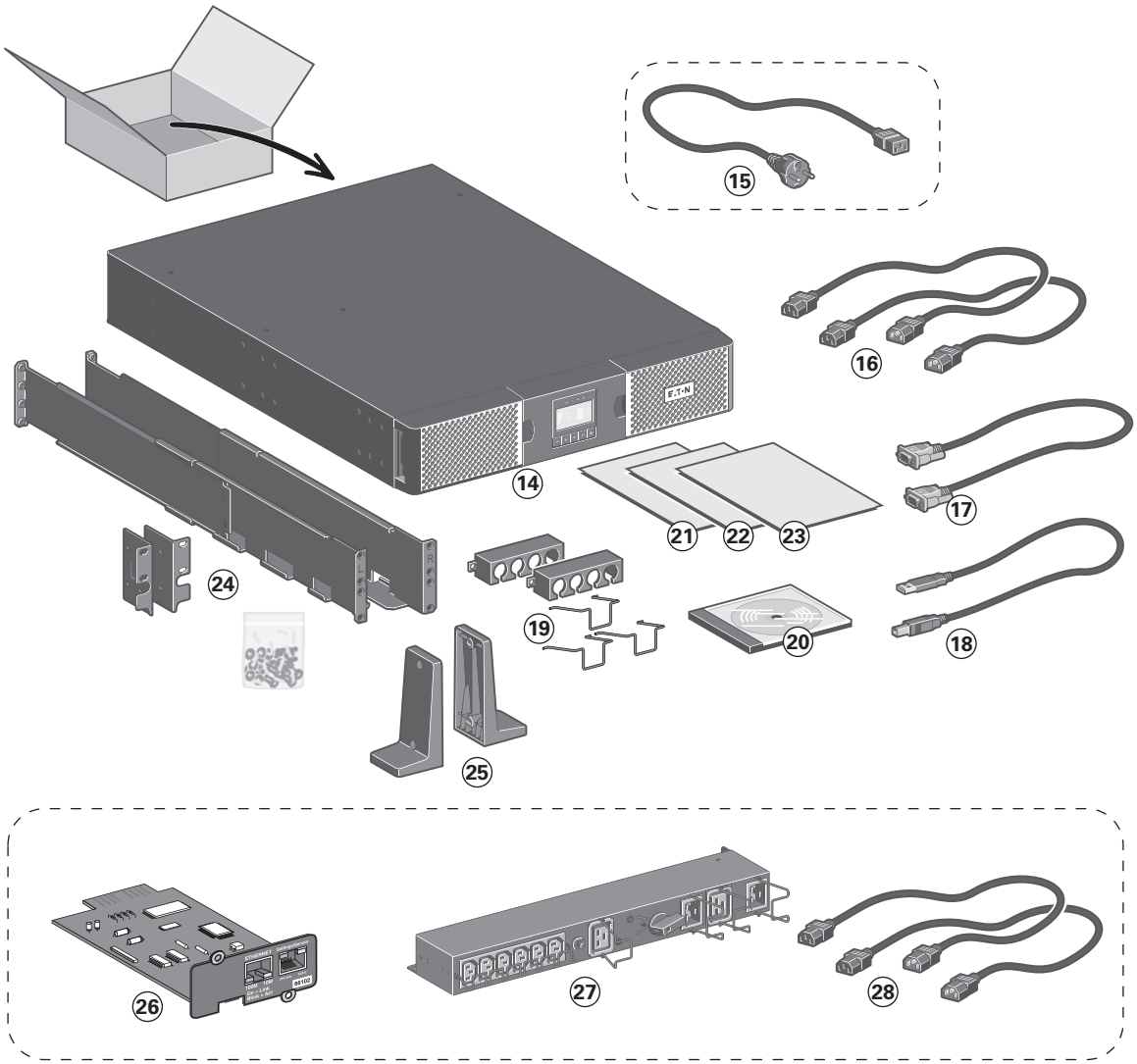

- Verify that the following additional items are included with the UPS:

⑭ 9PX UPS

⑮ Connection cable to AC-power source (**9PX 2200** and **3000** models only)

⑯ 2 connection cables for the protected equipment

⑰ RS232 communication cable

⑱ USB communication cable

⑲ Cable locking systems

⑳ Manual CD-ROM

㉑ Software leaflet

㉒ Safety instructions

㉓ Quick start

㉔ Mounting kit for 19-inch enclosures

㉕ 2 supports for tower position

Elements supplied depending on the version or optional

㉖ **NMC** communication card (optional, standard on Netpack versions)

㉗ **HotSwap MBP** module (optional, standard on HotSwap versions)

㉘ Connection cables between **HotSwap MBP** module and UPS

3. Installation

- If you ordered an optional Extended Battery Module (EBM), verify that the following additional items are included with the EBM:

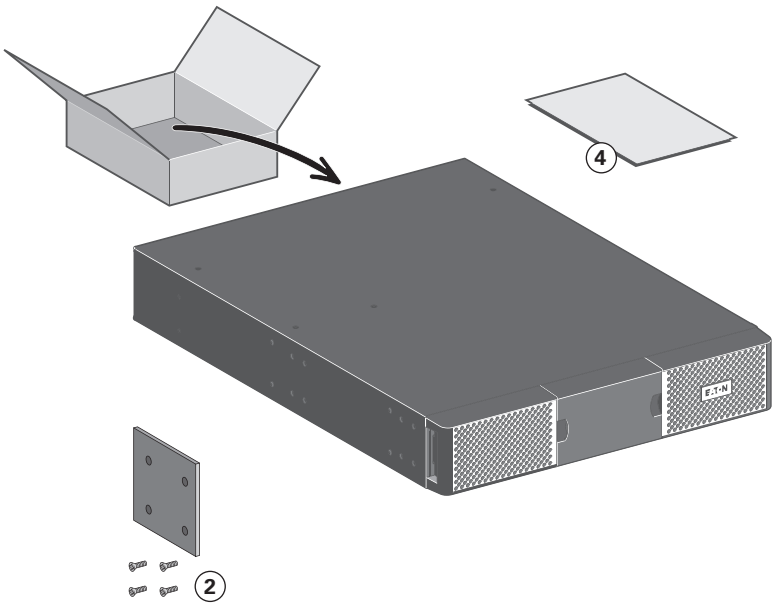

① Battery power cable, attached with battery detection cable
② Stabilizer bracket (4 screws included)
③ Rack kit for 19-inch enclosures (optional)
④ EBM Installation manual.

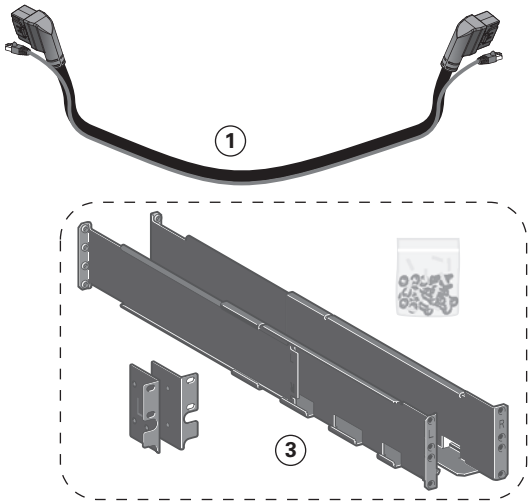

Discard the EBM user's guide if you are installing the EBM with a new UPS at the same time. Use the UPS user's guide to install both the UPS and the EBM.

If you ordered other UPS accessories, refer to specific user manuals to check the packing contents.

3.3 Connecting the EBM(s)

A small amount of arcing may occur when connecting an EBM to the UPS. This is normal and will not harm personnel. Insert the EBM cable into the UPS battery connector quickly and firmly.

1. Plug the EBM power cable(s) into the battery connector(s). Up to 4 EBMs may be connected to the UPS.
2. Verify that the EBM connections are tight and that adequate bend radius and strain relief exist for each cable.
3. Connect the battery detection cable(s) to the connector of the UPS and of the EBM(s).

9PXEBM48RT2U

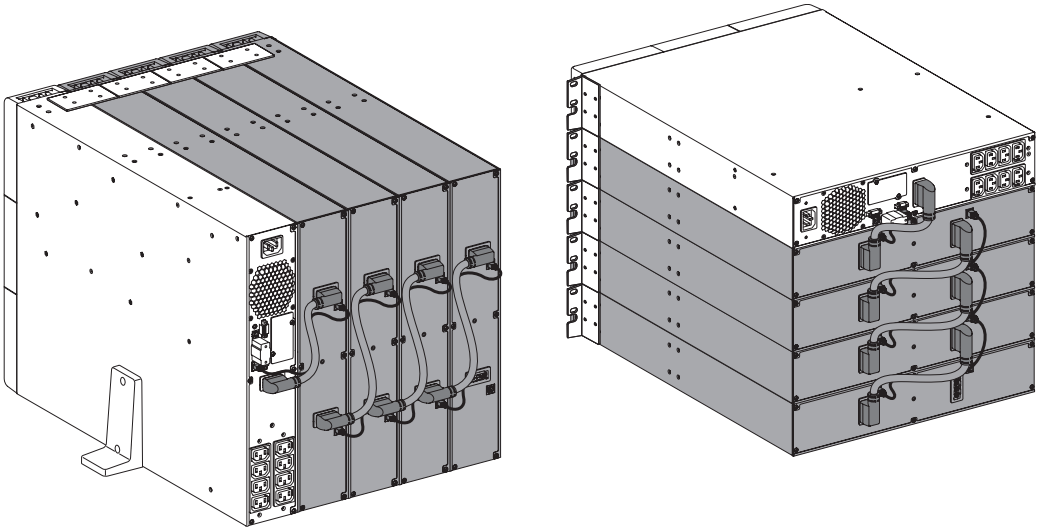

9PXEBM72RT2U

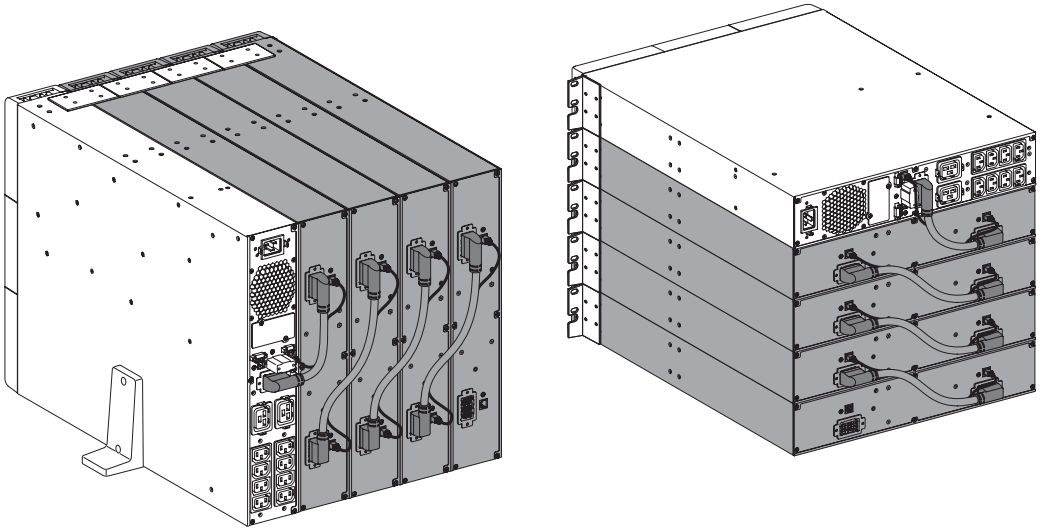

9PXEBM72RT3U

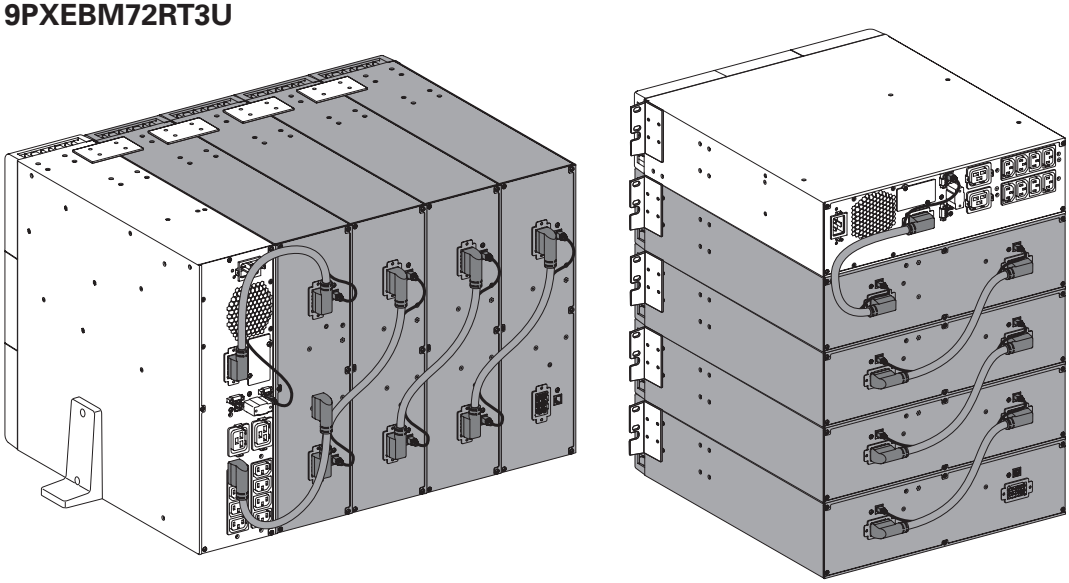

3.4 Connecting other accessories

If you ordered other UPS accessories, refer to specific user manuals to check the connection to the UPS.

3. Installation

3.5 Tower installation

If you ordered other UPS accessories, refer to specific user manuals to check the tower installation with the UPS.

To install the cabinet:

1. Place the UPS on a flat, stable surface in its final location.
2. Always keep 150 mm of free space behind the UPS rear panel.
3. If installing additional cabinets, place them next to the UPS in their final location.

- Adjustment of the orientation of the LCD panel and of the logo.

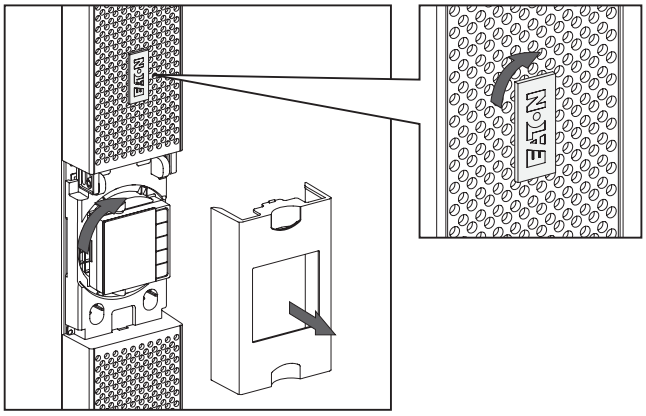

- Adjustment of the angle of vision of the LCD panel.

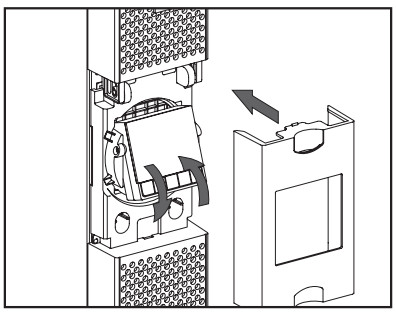

3.6 Rack installation

- Rack mounting of UPS, EBM, and accessory modules.

Follow steps 1 to 4 for module mounting on the rails.

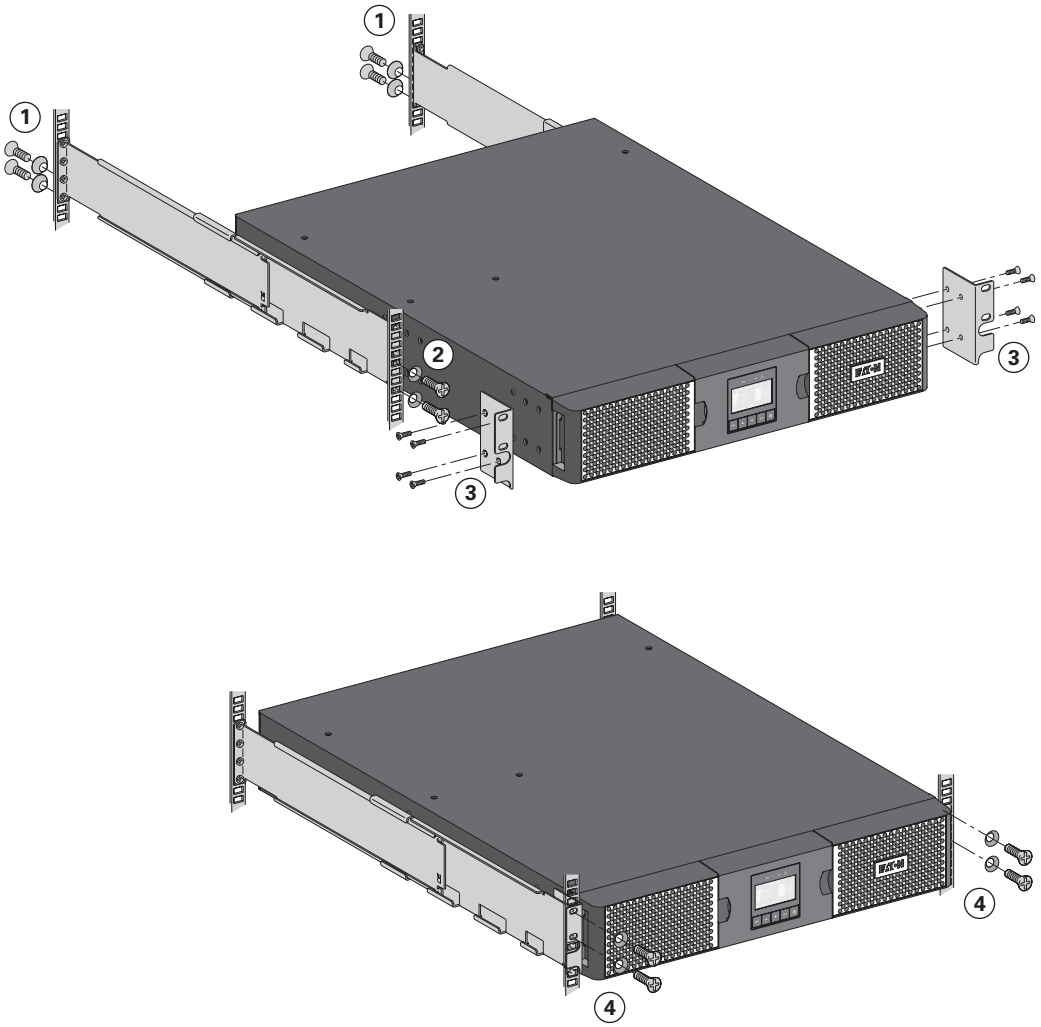

The rails and necessary hardware are supplied by EATON.

3. Installation

3.7 UPS connection without HotSwap MBP module

Check that the indications on the name plate located on the back of the UPS correspond to the AC-power source and the true electrical consumption of the total load.

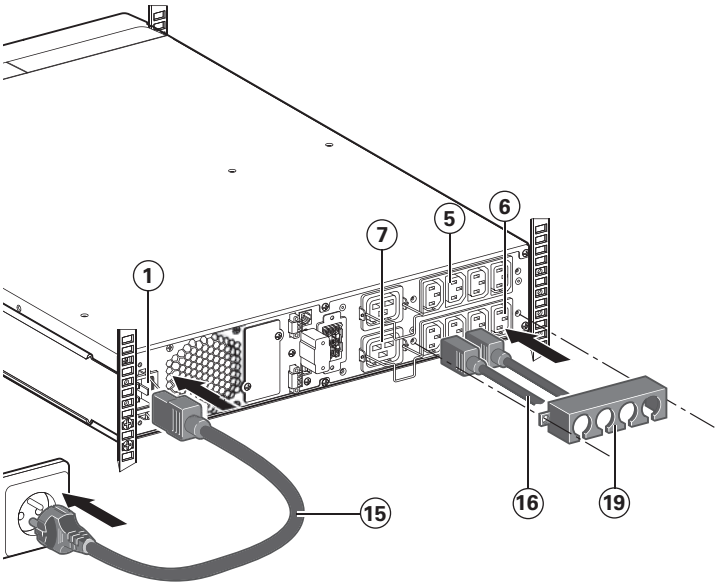

1. **9PX 1000I / 1500I** : connect the UPS input socket ① to the AC-power source using the cable of the protected equipment.
   9PX 2200I / 3000I: connect the supplied cable ⑮ (250 V - 16 A) to the socket ①, then to the AC-power source.

2. Connect the loads to the UPS using the cables ⑯.
   It is preferable to connect the priority loads to the outlets marked ⑤ and the non-priority loads to the outlets marked ⑥ ⑦ that can be programmed.
   For the **9PX 2200I / 3000I** models, connect any high-power devices to the 16 A outlet.

To program shutdown of outlets ⑥ ⑦ during operation on battery power and thus optimise the available backup time, please check the in/out settings.

3. Fit the connection securing system ⑲ that prevents the plugs from being pulled out accidentally.

Note. The UPS charges the battery as soon as it is connected to the AC-power source, even if ⏻ button is not pressed.

Once the UPS is connected to the AC-power source, eight hours of charging are required before the battery can supply the rated backup time.

3.8 Connection with a HotSwap MBP module (optional, standard on HotSwap versions)

The **HotSwap MBP** module makes it possible to service or even replace the UPS without affecting the connected loads (**HotSwap** function).

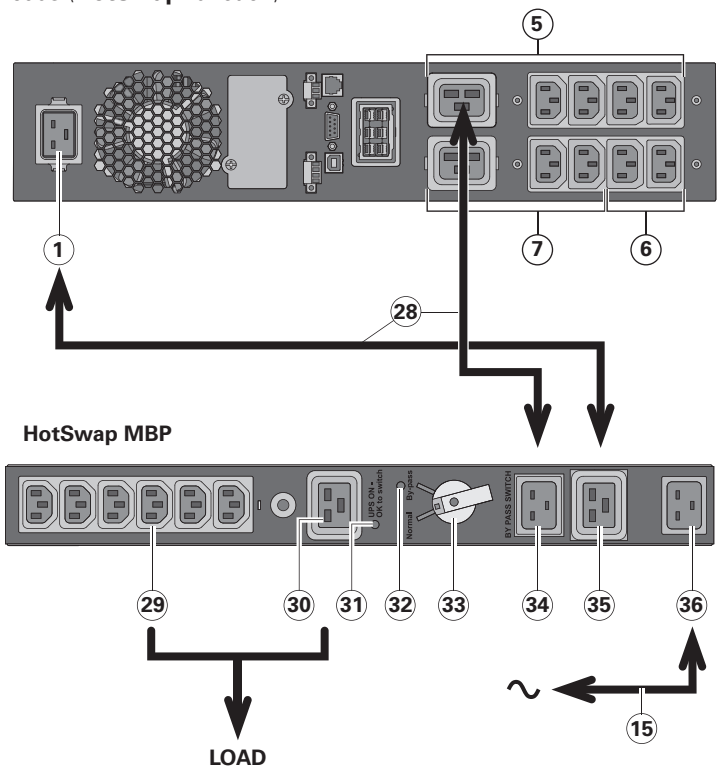

9PX 2200IRT / 9PX 3000IRT:

1. Connect the input socket (36) on the **HotSwap MBP** module to the AC-power source using the cable (15) supplied.
2. Connect the UPS input socket (1) to the "UPS Input" (35) on the **HotSwap MBP** module, using the cable (28) supplied. These cables and the connectors are marked blue.
3. Connect the UPS outlet (5) to the "UPS Output" (34) on the HotSwap MBP module, using the cable (28) supplied.
   These cables and the connectors are marked in red.
4. Connect the equipment to the outlets (29) and (30) on the **HotSwap MBP** module. These outlets differ, depending on the version of the **HotSwap MBP** module.

   Caution. Do not use UPS outlets to supply equipment because use of switch (33) on the HotSwap MBP module would cut supply to the equipment.

9PX 1000IRT / 9PX 1500IRT:
An additional cable kit is required to connect the UPS to the MBP. Follow the same procedure as for the 9PX 2200IRT / 9PX 3000IRT using the blue and red color markings.

HotSwap MBP module operation

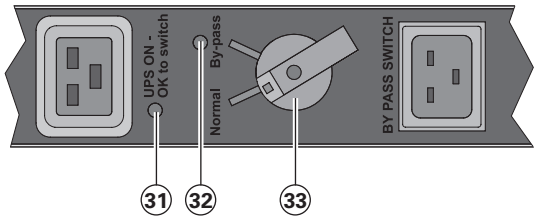

The HotSwap MBP module has a rotary switch (33) with two positions:

Normal the load is supplied by the UPS, LED (31) is on.

Bypass the load is supplied directly by the AC-power source. LED (32) is on.

UPS start-up with the HotSwap MBP module

1. Check that the UPS is correctly connected to the **HotSwap MBP** module.
2. Set switch (33) to Normal position.
3. Start the UPS by pressing the ON/OFF button ⏻ on the UPS control panel.

The load is supplied by the UPS.
LED (31) "UPS ON - OK to switch" on the **HotSwap MBP** module goes ON.

HotSwap MBP module test

1. Set switch (33) to Bypass position and check that the load is still supplied.
2. Set switch (33) back to Normal position.

4. Communication

4.1 Communication ports

Connection of RS232 or USB communication port

The RS232 and USB communication ports can operate simultaneously.

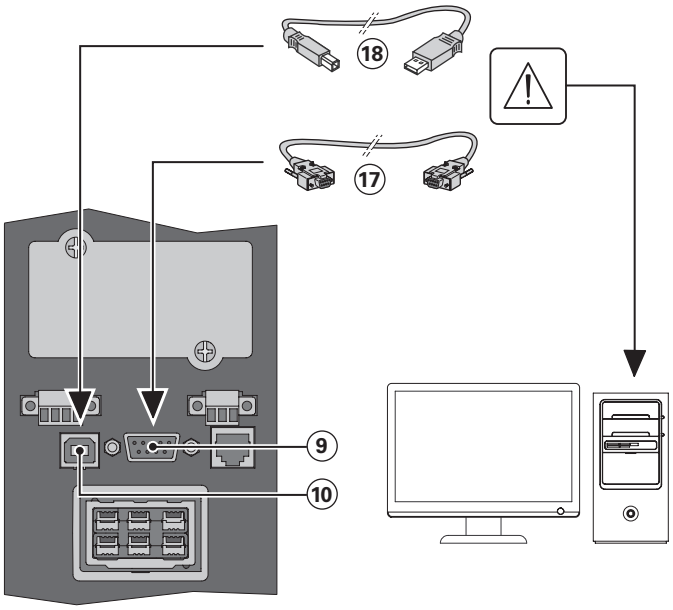

1. Connect the RS232 ⑰ or USB ⑱ communication cable to the serial or USB port on the computer equipment.

2. Connect the other end of the communication cable ⑰ or ⑱ to the USB ⑩ or RS232 ⑨ communication port on the UPS.

The **UPS** can now communicate with EATON power management software.

Installation of the communication cards (optional, standard on the Netpack versions)

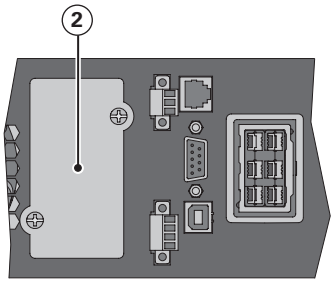

It is not necessary to shutdown the UPS before installing a communication card.

1. Remove the slot cover ② secured by screws.
2. Insert the communication card in the slot.
3. Secure the card cover with the 2 screws.

Characteristics of the contact RS232 communication port

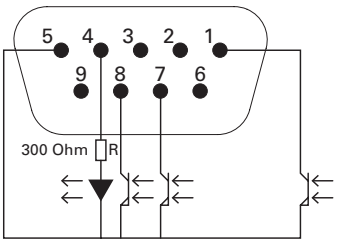

Pin	Signal	Direction	Function
1	Bat Low	Output	Low Battery Output
2	TxD	Output	Transmit to external device
3	RxD	Input	Receive from external device
4	I/P SIG	Input	-
5	GNDS	-	Signal Common tied to chassis
6	PNP	Input	Plug and Play
7	UPS OK	Output	UPS OK
8	BAT Mode	Output	-
9	+5V	Output	Power supply for external signal or options

Contact characteristics (optocoupler)

- Voltage: 48 V DC max
- Current: 25 mA max

4.2 UPS remote control functions

Programmable Signal Inputs

The 9PX incorporates 3 programmable signal inputs: one RPO terminal input, one ROO terminal input, one RS-232 input (pin-4). Signal inputs can be configured (see Settings > Com settings > Signal Input on page 15) to have one of the following functions:

Function	Description
No	No function, please choose a function if you want to use input signal
RPO	Remote Power off (RPO) is used to shutdown the UPS remotely
ROO	Remote On/Off allows remote action of button to switch On/Off the UPS. (Cold start is prohibited while using the ROO function)
Forced bypass	If feeding the load the unit goes to bypass operation and stays there regardless of the bypass state until the input is inactivated
Building alarm	Active input generates an alarm “building alarm”
On generator	Active input disables synchronization and transfers to bypass
Remote shutdown	Active input turns UPS output (or outlet groups) off after a user defined shutdown delay but keeps on charging batteries according to a selected charging scheme, inactive input does not abort shutdown countdown. Depending on the “Restart” parameter (see Settings > Com Settings > Shutdown commands on page 16) the unit may startup automatically.

Warning Signal inputs have no function by default please choose a function through the LCD (Settings > Com settings > Input signals on page 15).

See below 2 examples of configuration with RPO terminal used as RPO function and ROO terminal use as ROO function:

- **Remote Power Off (RPO)**

RPO is used to shutdown the UPS remotely when the contact is open. This feature can be used for shutting down the load and
the UPS by thermal relay, for instance in the event of room over temperature. When RPO is activated, the UPS shuts down the output and all its power converters immediately. The UPS remains on to alarm the fault.
The RPO circuit is an IEC 60950 safety extra low voltage (SELV) circuit. This circuit must be separated from any hazardous voltage circuits by reinforced insulation.

- The RPO must not be connected to any utility connected circuits. Reinforced insulation to the utility is required. The RPO switch must be a dedicated latching-type switch not tied into any other circuit. The RPO signal must remain active for at least 250 ms for proper operation.
- To ensure the UPS stops supplying power to the load during any mode of operation, the input power must be disconnected from the UPS when the Remote Power Off function is activated.

Leave the RPO connector installed in the RPO port on the UPS even if the RPO function is not needed.

RPO connections:

RPO	Comments
Connector type	Terminal, 14 AWG Maximum wires
External breaker specification	60 V DC/30 V AC 20 mA max

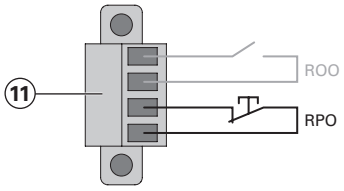

4. Communication

- **Remote On/Off (ROO)**

Remote On/Off allows remote action of button to switch On/Off the UPS.
When contact changes from open to closed, the UPS is switched-on (or stays On).
When contact changes from closed to open, the UPS is switched-off (or stays Off).
On/Off control via button has priority over the remote control.

ROO connections:

ROO	Comments
Connector type	Terminal, 14 AWG Maximum wires
External breaker specification	60 V DC/30 V AC 20 mA max

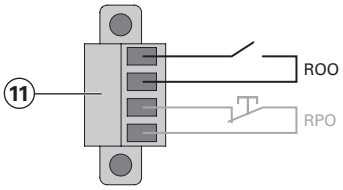

- **Remote control connection and test**

1. Check the UPS is shut down and the electrical supply network disconnected.
2. Remove RPO connector from the UPS by unfitting the screws.
3. Connect a normally closed volt-free contact between the two pins of connector.

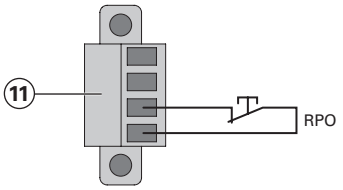

Normally closed

Contact open: shut down of UPS
To return to normal operation, deactivate the external remote shut down contact and restart the UPS from the front panel.

4. Plug the RPO connector into the back of the UPS and fix the screws.
5. Connect and restart the UPS according to the previously described procedures.
6. Activate the external remote shut down contact to test the function.
Always test the RPO function before applying your critical load to avoid accidental load loss.

Programmable Signal Outputs

The 9PX incorporates 4 programmable signal outputs: one relay output, three optocouplers outputs (pin-1/7/8). Signal outputs can be configured (see Settings > Com settings > Output Signals on page 16) to report the following information:

Signal	Default assignment	Description
On battery (On bat)	DB9-Pin 8	UPS is in battery mode
Low battery (Low bat)	DB9-Pin 1	Battery is nearly empty
Battery fault (Bat fault)	-	Battery fault
Bypass	Relay output (1)	UPS is operating in Bypass mode
UPS OK	DB9-Pin 7	Load is powered (from inverter or bypass), with no alarm
Load powered	-	Load is powered (from inverter or bypass)
Load protected	-	UPS is on inverter, with no alarm and ready to go to battery
General alarm	-	Choose events that will trigger this alarm trough the LCD (Settings > Com settings > General alarm) for more information on possible events please look at page 16.
Ext charger ON	-	Control an optional external battery charger on and off.
OVL pre-alarm	-	Overload pre-alarm

(1) Relay output:

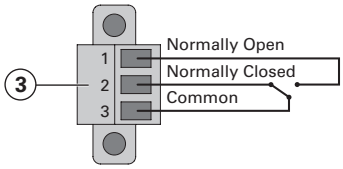

Connectivity Cards

Connectivity cards allow the UPS to communicate in a variety of networking environments and with different types of devices. The 9PX models have one available communication bay for the following connectivity cards:

- **Network-MS card** - has SNMP and HTTP capabilities as well as monitoring through a Web browser interface; connects to Ethernet network. In addition, a Environmental Monitoring Probe can be attached to obtain humidity, temperature, smoke alarm, and security information.
- **Modbus-MS card -** has connection to Modbus protocol in addition to network management.
- **Relay-MS card** - has isolated dry contact (Form-C) relay outputs for UPS status: Utility failure, Battery low, UPS alarm/OK, or on Bypass.

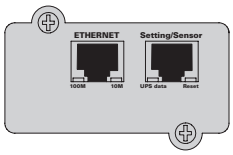

Network-MS card

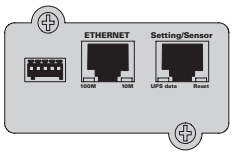

Modbus-MS card

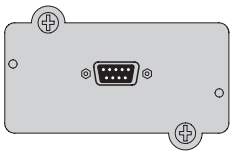

Relay-MS card

4.3 Eaton Intelligent Power Software suite

Eaton Intelligent Power Software suite is available from eaton.com/downloads.

Eaton Software suite provides up-to-date graphics of UPS power and system data and power flow.

It also gives you a complete record of critical power events, and it notifies you of important UPS or power information.

If there is a power outage and the 9PX UPS battery power becomes low, Eaton Software suite can automatically shut down your computer system to protect your data before the UPS shutdown occurs.

5. Operation

5.1 Start-up and Normal operation

To start the UPS:

1. Verify that the UPS power cord is plugged in.
2. The UPS front panel display illuminates and shows EATON logo.
3. Verify that the UPS status screen shows ⏻.
4. Press the ⏻ button on the UPS front panel for at least 2 seconds.
   The UPS front panel display changes status to "UPS starting...".
5. Check the UPS front panel display for active alarms or notices. Resolve any active alarms before continuing. See "Troubleshooting" on page 35.
   If the ⚠ indicator is on, do not proceed until all alarms are clear. Check the UPS status from the front panel to view the active alarms. Correct the alarms and restart if necessary.
6. Verify that the ∿ indicator illuminates solid, indicating that the UPS is operating normally and any loads are powered and protected.
   The UPS should be in Normal mode.

5.2 Starting the UPS on Battery

Before using this feature, the UPS must have been powered by utility power with output enabled at least once.
Battery start can be disabled. See the "Cold start" setting in "ON/OFF Settings" on page 14.

To start the UPS on battery:

1. Press the ⏻ button on the UPS front panel until the UPS front panel display illuminates and shows a status of "UPS starting...".
   The UPS transfers from Standby mode to Battery mode. The 🔋 indicator illuminates solid.
   The UPS supplies power to your equipment.
2. Check the UPS front panel display for active alarms or notices besides the "Battery mode" notice and notices that indicate missing utility power. Resolve any active alarms before continuing. See "Troubleshooting" on page 35.
   Check the UPS status from the front panel to view the active alarms. Correct the alarms and restart if necessary.

5.3 UPS Shutdown

To shut down the UPS:

1. Press the ⏻ button on the front panel for three seconds.
   A confirmation message will appear.
   When confirmed, the UPS starts to beep and shows a status of "UPS shutting OFF...". The UPS then transfers to Standby mode, and the ∿ indicator turns off.

5.4 Operating modes

The Eaton 9PX front panel indicates the UPS status through the UPS indicators, see page 11.

Online mode ∿

During Online mode, the ∿ indicator illuminates solid and the UPS is powered from the utility.
The UPS monitors and charges the batteries as needed and provides filtered power protection to your equipment. Optional High Efficiency and Energy Saving settings minimize heat contribution to the rack environment. See user settings on page 13.

Battery mode 🔋

When the UPS is operating during a power outage, the alarm beeps once every ten seconds and the 🔋 indicator illuminates solid. The necessary energy is provided by the battery.
When the utility power returns, the UPS transfers to Online mode operation while the battery recharges.
If battery capacity becomes low while on Battery mode, the audible alarm beeps once every 3 seconds. This warning is approximate, and the actual time to shutdown may vary significantly.
Shutdown all applications on the connected equipment because automatic UPS shutdown is imminent.
When utility power is restored after the UPS shuts down, the UPS automatically restarts.

Low-battery warning

- The indicator illuminates solid.
- The audio alarm beeps every three seconds.

The remaining battery power is low. Shut down all applications on the connected equipment because automatic UPS shutdown is imminent.

End of battery backup time

- LCD displays "End of backup time".
- All the LEDs go OFF.
- The audio alarms stops.

Bypass mode

In the event of a UPS overload or internal failure, the UPS transfers your equipment to utility power. Battery mode is not available and your equipment is not protected; however, the utility power continues to be passively filtered by the UPS. The indicator illuminates.

Depending on overload conditions, the UPS remains in Bypass mode for at least 5 seconds and will stay in this mode if three transfers to Bypass occur within 20 minutes.

The UPS transfers to Bypass mode when:

- the user activates Bypass mode through the front panel.
- the UPS detects an internal failure.
- the UPS has an overtemperature condition.
- the UPS has an overload condition listed in table 6 on page 38.

The UPS shuts down after a specified delay for overload conditions listed in table 6 on page 38. The UPS remains on to alarm the fault.

5.5 Return of AC Input Power

Following an outage, the UPS restarts automatically when AC input power returns (unless the restart function has been disabled) and the load is supplied again.

5.6 Setting High Efficiency mode

In High Efficiency mode, the UPS operates normally on Bypass and transfers to Online (or Battery) mode in less than 10 ms when utility fails. Transfers to High Efficiency mode will be active after 5 minutes of Bypass voltage monitoring: if Bypass quality is not in tolerance, then the UPS will remain in Online mode.

Eaton recommends to use the HE mode only to protect IT equipment.

To set the High Efficiency mode:

1. Select Settings, In/Out settings, and High Efficiency mode.
2. Select Enabled and Enter to confirm.
3. The UPS transfers to High Efficiency mode after 5 minutes.

5.7 Configuring Bypass settings

The following settings are available for configuring Bypass operation.

Bypass Voltage Low Limit

The default disables a transfer to Bypass if the measured bypass voltage level is below the nominal output voltage minus 20%. You can configure the setting for another voltage value. This setting can be overruled by the "Qualify Bypass" setting.

Bypass Voltage High Limit

The default disables a transfer to Bypass if the measured bypass voltage level is above the nominal output voltage plus 15%. You can configure the setting for another voltage value. This setting can be overruled by the "Qualify Bypass" setting.

5. Operation

5.7 Configuring Bypass settings

Qualify Bypass

The default setting ("In spec") allows a transfer to Bypass only when Bypass is within the following specifications:

- Bypass voltage is between the "Bypass Voltage Low Limit" and "Bypass Voltage High Limit" settings
- Bypass frequency is within nominal frequency 5%.

You can prohibit Bypass ("Never") or always allow Bypass with no specification checking ("Always"). For "Always on UPS Fault," transfer to Bypass is always made on UPS fault; otherwise, operation proceeds as with the default setting.

Synchronization Window

The UPS tries to synchronize with Bypass when the Bypass frequency is less than the value set for the "Synchronization Window" setting. When the Bypass frequency is more than the set value, the UPS goes to nominal frequency.

Unsynchronized Transfers

When Qualify Bypass is set to "Always" or "Always on Fault" you can select the interruption time when transferring to bypass, default setting is "Half Cycle" but can be changed to "Full cycle".

5.8 Configuring battery settings

Automatic battery test

Automatic battery tests are done every week in constant charging mode and at each cycle in ABM mode.
The tests frequency can be modified.
During the test, the UPS transfers to Battery mode and discharges the batteries for 10 seconds under load.

Battery mode is not displayed and battery low alarm does not activate during a battery test.

The battery test may be postponed due to bad conditions, or failed if battery is not ok.

Low battery warning

During discharge, the low battery alarm is activated if the remaining runtime goes below 3 minutes or less than the setting capacity threshold (0 % by default).
This threshold can be modified.

External battery setting

The number of Extended Battery Module is automatically detected, or can be set manually in number of EBM or in Ah.

Deep discharge protection

This setting is recommended to avoid damaging the battery. Warranty is void if deep discharge protection is disabled.

5.9 Retrieving the Event log

To retrieve the Event log through the display:

1. Press any button to activate the menu options, then select Event log.
2. Scroll through the listed events.

5.10 Retrieving the Fault log

To retrieve the Fault log through the display:

1. Press any button to activate the menu options, then select Fault log.
2. Scroll through the listed faults.

6. UPS maintenance

6.1 Equipment care

For the best preventive maintenance, keep the area around the equipment clean and dust free.
If the atmosphere is very dusty, clean the outside of the system with a vacuum cleaner.
For full battery life, keep the equipment at an ambient temperature of 25°C (77°F).

If the UPS requires any type of transportation, verify that the UPS is disconnected and turned off.
The batteries are rated for a 3-5 year service life. The length of service life varies, depending on the frequency of usage and ambient temperature (life divided by 2 each 10°C above 25°C). Batteries used beyond expected service life will often have severely reduced runtimes. Replace batteries at least every 4 years to keep units running at peak efficiency.

6.2 Storing the equipment

If you store the equipment for a long period, recharge the battery every 6 months by connecting the UPS to utility power. The internal batteries charge to 90% capacity in less than 3 hours.
However, Eaton recommends that the batteries charge for 48 hours after long-term storage.
Check the battery recharge date on the shipping carton label.
If the date has passed and the batteries were never recharged, do not use them. Contact your service representative.

6.3 When to replace batteries

When the battery replacement screen is displayed, it is recommended to replace the batteries.
Contact your service representative to order new batteries.
Battery recommended replacement date can be accessed through the LCD (Measurements > Battery).

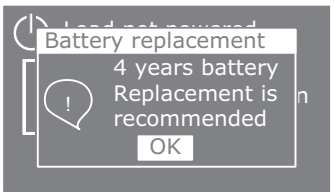

6. UPS maintenance

6.4 Replacing batteries

DO NOT DISCONNECT the batteries while the UPS is in Battery mode.

Batteries can be replaced easily without turning off the UPS or disconnecting the load.
If you prefer to remove input power to change the batteries, see "UPS Shutdown" on page 28.

Consider all warnings, cautions, and notes before replacing batteries.

- Servicing should be performed by qualified service personnel knowledgeable of batteries and required precautions. Keep unauthorized personnel away from batteries.
- Batteries can present a risk of electrical shock or burn from high short circuit current.
  Observe the following precautions:
  1. Remove watches, rings, or other metal objects,
  2. Use tools with insulated handles,
  3. Do not lay tools or metal parts on top of batteries,
  4. Wear rubber gloves and boots.
- When replacing batteries, replace with the same type and number of batteries or battery packs.
  Contact your service representative to order new batteries.
- Proper disposal of batteries is required. Refer to your local codes for disposal requirements.
- Never dispose of batteries in a fire. Batteries may explode when exposed to flame.
- Do not open or mutilate the battery or batteries. Released electrolyte is harmful to the skin and eyes and may be extremely toxic.
- Determine if the battery is inadvertently grounded. If inadvertently grounded, remove source from ground. Contact with any part of a grounded battery can result in electrical shock.
  The likelihood of such shock can be reduced if such grounds are removed during installation and maintenance (applicable to equipment and remote battery supplies not having a grounded supply circuit).
- ELECTRIC ENERGY HAZARD. Do not attempt to alter any battery wiring or connectors. Attempting to alter wiring can cause injury.
- Disconnect charging source prior to connecting or disconnecting battery terminals.

- **Replacing the internal battery**

The internal battery is heavy. Use caution when handling the heavy batteries.

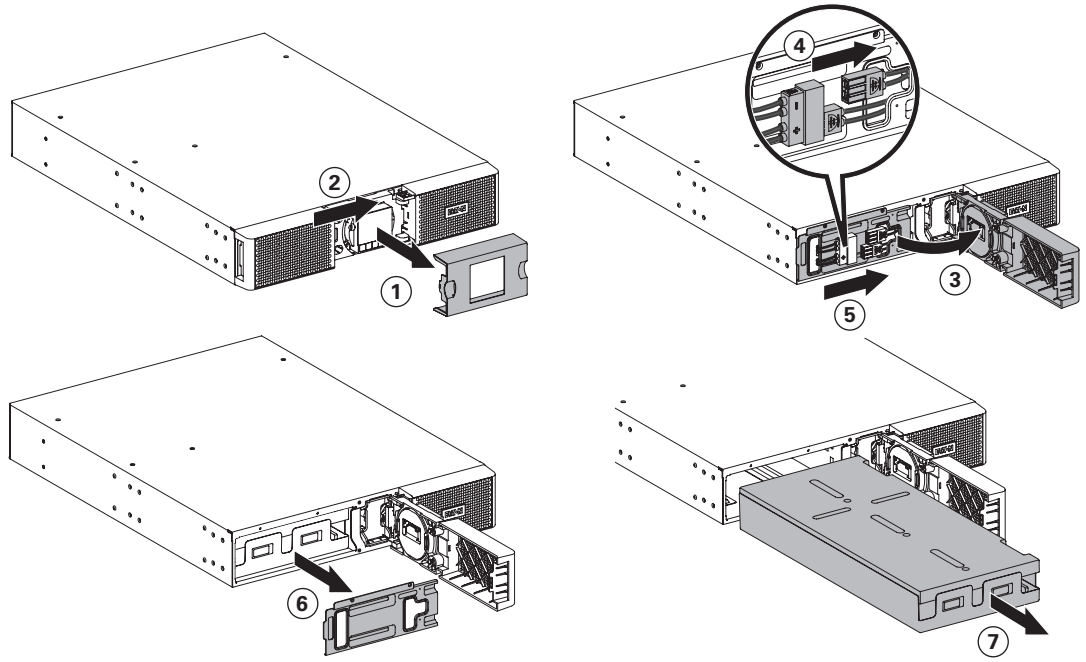

To replace the battery pack:

1. Remove the center cover of the front panel.
2. Push left cover toward to right direction.
3. Open the battery door.

A ribbon cable connects the LCD control panel to the UPS. Do not pull on the cable or disconnect it.

4. Remove the two screws of the metal protection cover of the battery and push it to the right.
5. Pull out the metal protection cover of the battery.
6. Pull out the plastic handle of the battery pack, and slide the pack out slowly on to a flat and stable surface. Use two hands to support the battery pack. See "Recycling the used equipment" on page 34 for proper disposal.
7. Verify that the replacement batteries have the same rating as the batteries being replaced.
8 Put the new battery pack into the UPS. Push the battery pack firmly to ensure a proper connection.
9. Screw back the metal protection cover and the front panel, then clip the center cover.
10. Continue to “Testing new batteries” on page 33.
11. Reset the 4 years Life Cycling Monitoring (LCM): Control > Reset battery life.

- **Replacing the EBM(s)**

The EBM is heavy. Lifting the cabinet into a rack requires a minimum of two people.

To replace the EBM(s):

1. Unplug the EBM power cable and battery detection cable from the UPS.
   If additional EBM(s) are installed, unplug the EBM power cable and battery detection cable from each EBM.
2. Replace the EBM(s). See "Recycling the used equipment" on page 34 for proper disposal.

A small amount of arcing may occur when connecting an EBM to the UPS. This is normal and will not harm personnel. Insert the EBM cable into the UPS battery connector quickly and firmly.

3. Plug the EBM cable(s) into the battery connector(s). Up to four EBMs may be connected to the UPS.
4. Verify that the EBM connections are tight and that adequate bend radius and strain relief exist for each cable.
5. Connect the battery detection cable(s) to the connector of the UPS and of the EBM(s).

- **Testing new batteries**

To test new batteries:

1. Charge the batteries for 48 hours.
2. Press any button to activate the menu options.
3. Select Control then Start battery test.
   The UPS starts a battery test if the batteries are fully charged, the UPS is in Normal mode with no active alarms, and the bypass voltage is acceptable.
   During the battery test, the UPS transfers to Battery mode and discharges the batteries for 10 seconds. The front panel displays "Battery test in progress" and the percentage of the test completed.

6. UPS maintenance

6.5 Replacing the UPS equipped with a HotSwap MBP

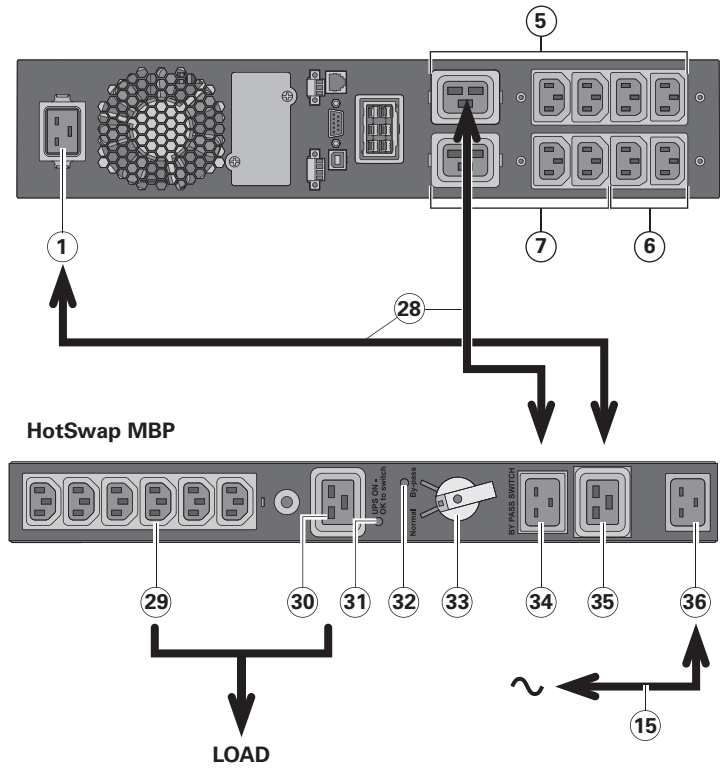

The **HotSwap MBP** module makes it possible to service or even replace the UPS without affecting the connected loads (**HotSwap** function).

Maintenance

1. Set switch (33) to Bypass position. The red LED on the **HotSwap MBP** module goes ON, indicating that the load is supplied directly with AC input source power.
2. Stop the UPS by pressing the ⏻ button on the UPS control panel. LED (31) "UPS ON - OK to switch" goes OFF, the UPS can now be disconnected and replaced.

Return to normal operation

1. Check that the UPS is correctly connected to the **HotSwap MBP** module.
2. Start the UPS by pressing the ⏻ button on the UPS control panel. LED (31) "UPS ON - OK to switch" on the **HotSwap MBP** module goes ON (otherwise, there is a connection error between the **HotSwap MBP** module and the UPS).
3. Set switch (33) to Normal position. The red LED on the **HotSwap MBP** module goes OFF.

6.6 Recycling the used equipment

Contact your local recycling or hazardous waste center for information on proper disposal of the used equipment.

- Do not dispose of the battery or batteries in a fire. Batteries may explode. Proper disposal of batteries is required. Refer to your local codes for disposal requirements.
- Do not open or mutilate the battery or batteries. Released electrolyte is harmful to the skin and eyes. It may be toxic.

Pb

Do not discard the UPS or the UPS batteries in the trash. This product contains sealed, lead acid batteries and must be disposed of properly. For more information, contact your local recycling/ reuse or hazardous waste center.

Do not discard waste electrical or electronic equipment (WEEE) in the trash. For proper disposal, contact your local recycling/reuse or hazardous waste center.

7. Troubleshooting

The Eaton 9PX are designed for durable, automatic operation and also alert you whenever potential operating problems may occur. Usually the alarms shown by the control panel do not mean that the output power is affected. Instead, they are preventive alarms intended to alert the user.

- Events are silent status information that are recorded into the Event log. Example = "AC freq in range".
- Alarms are recorded into the Event log and displayed on the LCD status screen with the logo blinking. Some alarms may be announced by a beep every 3 seconds. Example = "Battery low".
- Faults are announced by a continuous beep and red LED, recorded into the Fault log and displayed on the LCD with a specific message box. Example = Out. short circuit.

Use the following troubleshooting chart to determine the UPS alarm condition.

7.1 Typical alarms and faults

To check the Event log or Fault log :

1. Press any button on the front panel display to activate the menu options.
2. Press the ↓ button to select Event log or Fault log.
3. Scroll through the listed events or faults.

The following table describes typical conditions.

Conditions	Possible cause	Action
Battery mode LED is On. 1 beep every 10 seconds.	A utility failure has occurred and the UPS is in Battery mode.	The UPS is powering the equipment with battery power. Prepare your equipment for shutdown.
Battery low LED is On. 1 beep every 3 seconds.	The UPS is in Battery mode and the battery is running low.	This warning is approximate, and the actual time to shutdown may vary significantly. Depending on the UPS load and number of Extended Battery Modules (EBMs), the "Battery Low" warning may occur before the batteries reach 20% capacity.
No battery LED is On. Beep continuous.	The batteries are disconnected.	Verify that all batteries are properly connected. If the condition persists, contact your service representative.
Battery fault LED is On. Beep continuous.	The battery test is failed due to bad or disconnected batteries, or the battery minimum voltage is reached in ABM cycling mode.	Verify that all batteries are properly connected. Start a new battery test: if the condition persists, contact your service representative.
The UPS does not provide the expected backup time.	The batteries need charging or service.	Apply utility power for 48 hours to charge the batteries. If the condition persists, contact your service representative.
Bypass mode LED is on.	An overload or a fault has occurred, or a command has been received and the UPS is in Bypass mode	Equipment is powered but not protected by the UPS. Check for one of the following alarms: overtemperature, overload or UPS failure.
Power overload LED is On. Beep continuous.	Power requirements exceed the UPS capacity (greater than 100% of nominal; see in table 6 on page 38 for specific output overload ranges).	Remove some of the equipment from the UPS. The UPS continues to operate, but may switch to Bypass mode or shut down if the load increases. The alarm resets when the condition becomes inactive.

7. Troubleshooting

UPS overtemperature LED is On. 1 beep every 3 seconds.	The UPS internal temperature is too high or a fan has failed. At the warning level, the UPS generates the alarm but remains in the current operating state. If the temperature rises another 10°C, the UPS transfers to Bypass mode or shuts down if Bypass is unusable.	If the UPS transferred to Bypass mode, the UPS will return to normal operation when the temperature drops 5°C below the warning level. If the condition persists, shut down the UPS. Clear vents and remove any heat sources. Allow the UPS to cool. Ensure the airflow around the UPS is not restricted. Restart the UPS. If the condition continues to persist, contact your service representative.
The UPS does not start.	The input source is not connected correctly.	Check the input connections.
	The Remote Power Off (RPO) switch is active or the RPO connector is missing.	If the UPS Status menu displays the "Remote Power Off" notice, inactivate the RPO input.

7.2 Silencing the alarm

Press the ESC (Escape) button on the front panel display to silence the alarm. Check the alarm condition and perform the applicable action to resolve the condition. If the alarm status changes, the alarm beeps again, overriding the previous alarm silencing.

7.3 Service and support

If you have any question or problem with the UPS, call your distributor, your local service representative or connect to : **powerquality.eaton.com**.

Please have the following information ready when you call for service:

- Model number
- Serial number
- Firmware version number
- Date of failure or problem
- Symptoms of failure or problem
- Customer return address and contact information

If repair is required, you will be given a Returned Material Authorization (RMA) number. This number must appear on the outside of the package and on the Bill Of Lading (if applicable). Use the original packaging or request packaging from the Help Desk or distributor. Units damaged in shipment as a result of improper packaging are not covered under warranty. A replacement or repair unit will be shipped, freight prepaid for all warrantied units.

For critical applications, immediate replacement may be available. Call the **Help Desk** for the dealer or distributor nearest you.

7.4 CE compliance contact

- Eaton I.F. SAS - 110 Rue Blaise Pascal - 38330 Montbonnot St Martin – France.

8. Specifications

8.1 Model specifications

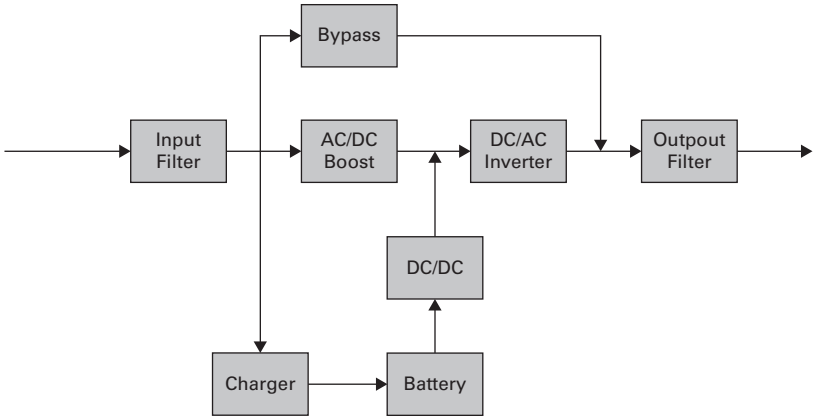

Table 1. Power Module model list

Model	Power ratings
9PX1000IRT2U	1000VA / 1000W
9PX1500IRT2U	1500VA / 1500W
9PX1500IRTM	1500VA / 1500W
9PX2200IRT2U	2200VA / 2200W
9PX2200IRT3U	2200VA / 2200W
9PX3000IRT2U	3000VA / 3000W
9PX3000IRT3U	3000VA / 3000W
9PX3000IRTM	3000VA / 3000W

Table 2. Extended Battery Module model list

Model	Configuration	Battery voltage	For power ratings
9PXEBM48RT2U	Rack /Tower	48Vdc	1000-1500VA
9PXEBM72RT2U	Rack /Tower	72Vdc	2200-3000VA
9PXEBM72RT3U	Rack /Tower	72Vdc	2200-3000VA

Table 3. Weights and dimensions

Model (UPS)	Dimensions D x W x H (mm / in)	Weight (kg / lb)
9PX1000IRT2U	-	-
9PX1500IRT2U	-	-
9PX1500IRTM	-	-
9PX2200IRT2U	605 x 440 x 86.5 / 23.8 x 17.3 x 3.4	25 / 55.2
9PX2200IRT3U	485 x 440 x 130 / 19.1 x 17.3 x 5.1	24.5 / 54.1
9PX3000IRT2U	605 x 440 x 86.5 / 23.8 x 17.3 x 3.4	27.6 / 60.8
9PX3000IRT3U	485 x 440 x 130 / 19.1 x 17.3 x 5.1	27.4 / 60.4
9PX3000IRTM	-	-
Model (EBM)	**Dimensions D x W x H (mm/in)**	**Weight (kg/lb)**
9PXEBM48RT2U	-	-
9PXEBM72RT2U	605 x 440 x 86.5 / 23.8 x 17.3 x 3.4	39.2 / 86.4
9PXEBM72RT3U	485 x 440 x 130 / 19.1 x 17.3 x 5.1	38.2 / 84.2

8. Specifications

Table 4. Electrical input

Nominal frequency	50/60Hz auto-sensing
Frequency range	40-70Hz before transfer to battery
Bypass voltage range	-20% / +15% of nominal value (default)

Model	Default input (Voltage/Current)	Input nominal voltages	Input voltage window
9PX1000IRT2U	-	200V, 208V, 220V, 230V, 240V	at 100% load: 176-276V at <33% load: 100-276V
9PX1500IRT2U	-		
9PX1500IRTM			
9PX2200IRT2U	230V / 12A		
9PX2200IRT3U			
9PX3000IRT2U	230V / 16A		
9PX3000IRT3U			
9PX3000IRT3UM			

Table 5. Electrical input connections

Model	Input connection	Input cable
9PX1000IRT2U	IEC-C14	IEC10A
9PX1500IRT2U		
9PX1500IRTM		
9PX2200IRT2U	IEC-C20	IEC16A
9PX2200IRT3U		
9PX3000IRT2U		
9PX3000IRT3U		
9PX3000IRTM		

Table 6. Electrical output

All models	Normal mode	Battery mode
Voltage regulation	±1%	±2%
Efficiency	98% (High Efficiency mode) 94% for 3K, 93% for 2.2K	89% for 3K 90% for 2.2K
Frequency regulation	Sync with line ±5% of nominal line frequency (outside this range: ±0.5% of auto-selected nominal frequency)	±0.5% of auto-selected nominal frequency
Nominal output	200/208/220/230/240V (voltage configurable)	
Frequency	50 or 60Hz, autosensing or configurable as a frequency converter	
Output overload	Online mode: 102%~130% : 12s 130%~150% : 2s >150% : shutdown after 300ms Percent is based on nominal Watt/VA. Transfer behavior can change (see output mode setting on page 14) Battery mode: 102%~130% : 12s >130% : 2s >150% : shutdown after 300 ms Overload warning then transfer to stop output	
Output overload (Bypass mode)	102%~110% : overload warning 110%~130% : shutdown after 5mins 130%~150% : shutdown after 15s >150% : shutdown after 300ms Percent is based on nominal current in bypass mode	
Voltage waveform	Sinewave	
Harmonic distortion	< 3% THDV on linear load < 5% THDV on non-linear load	
Power factor	Up to 1	
Load crest ratio	Up to 3:1	

8. Specifications

Table 7. Electrical output connections

Model	Output connection	Output cables
9PX1000IRT2U	(4) IEC10A (2) IEC10A group 1 (2) IEC10A group 2	(2) IEC10A
9PX1500IRT2U		
9PX1500IRTM		
9PX2200IRT2U	(4) IEC10A + (1) IEC16A (2) IEC10A + (1) IEC16A group 1 (2) IEC10A group 2	(2) IEC10A
9PX2200IRT3U		
9PX3000IRT2U		
9PX3000IRT3U		
9PX3000IRTM		

Table 8. Environmental and safety

Certifications	IEC/EN 62040-1 IEC/EN 62040-2: Cat. C1 IEC/EN 62040-3 UL1778 5th edition CSA 22.2
EMC (Emissions)*	CISPR22 Class B FCC part 15 Class B / ICES-003
EMC (Immunity)	IEC 61000-4-2, (ESD): 8 kV Contact Discharge / 15 kV Air Discharge IEC 61000-4-3, (Radiated field): 10 V/m IEC 61000-4-4, (EFT): 4 kV IEC 61000-4-5, (Surges): 2 kV Differentiel Mode / 4 kV Common Mode IEC 61000-4-6, (Electromagnetic field): 10 V IEC 61000-4-8, (Conducted magnetic field): 30 A/m

***** for output cable < 10m.

Agency markings	CE / cULus / EAC / RCM / KC / Energy Star
Operating temperature	0 to 40°C (32 to 104°F) in Online mode, with linear derating for altitude **Note:** thermal protection switches load to Bypass in case of overheating.
Storage temperature	0 to 35°C (32 to 95°F) with batteries -25 to 55°C (-13 to 130°F) without batteries
Transit temperature	-25 to 55°C (-13 to 130°F)
Relative humidity	0 to 96% no condensing
Operating altitude	Up to 3,000 meters (9,843 ft) above sea level, no derating for 35°c (95°F) room temperature
Transit altitude	Up to 10,000 meters (32,808 ft) above sea level
Audible noise	< 47 dBA at 1 meter typical

Table 9. Battery

	Internal batteries	EBM
Rack / Tower configuration	1000VA: 48Vdc - 4 x 12V, 7Ah 1500VA: 48Vdc - 4 x 12V, 9Ah 2200VA: 72Vdc - 6 x 12V, 7Ah 3000VA: 72Vdc - 6 x 12V, 9Ah	9PXEBM48RT: 48Vdc - 2 strings of 4 x 12V, 9Ah 9PXEBM72RT: 72Vdc - 2 strings of 6 x 12V, 9Ah
Fuse	2.2K: 50A 3K: 75A	75A
Type	Sealed, maintenance-free, valve-regulated, lead-acid, with minimum 3-year float service life at 25°C (77°F).	
Monitoring	Advanced monitoring for earlier failure detection and warning	
EBM battery cable length	350 mm / 13.78 in	

9. Glossary

Bypass AC source	Source supplying the bypass line. The equipment can be transferred to the bypass line if an overload occurs on the UPS output, for maintenance or in the event of a malfunction.
Frequency converter	Operating mode used to convert the AC-power frequency between the UPS input and output (50Hz -> 60Hz or 60Hz -> 50Hz).
Low-battery warning	This is a battery-voltage level indicating that battery power is low and that the user must take action to prevent the imminent break in the supply of power to the load.
Backup time	Time during which the load can be supplied by the UPS operating on battery power.
Load	Devices or equipment connected to the UPS output.
HE mode	Operating mode by which the load is supplied directly by the AC source if it is within the tolerances defined by the user. This mode reduces the consumption of electrical power
Manual bypass	Rotary switch controlled by the user, used to connect the loads directly to the AC source. Transfer of the load to the manual bypass enables UPS maintenance without interrupting the supply of power to the connected loads.
Normal (double conversion) mode	The normal UPS operating mode in which the AC source supplies the UPS which in turn supplies the connected loads (after electronic double conversion).
Normal AC source	Normal source of power for the UPS.
Relay contacts	Contacts supplying information to the user in the form of signals.
UPS	Uninterruptible Power Supply.